GZP2, Two pickups, SERIES WIRING

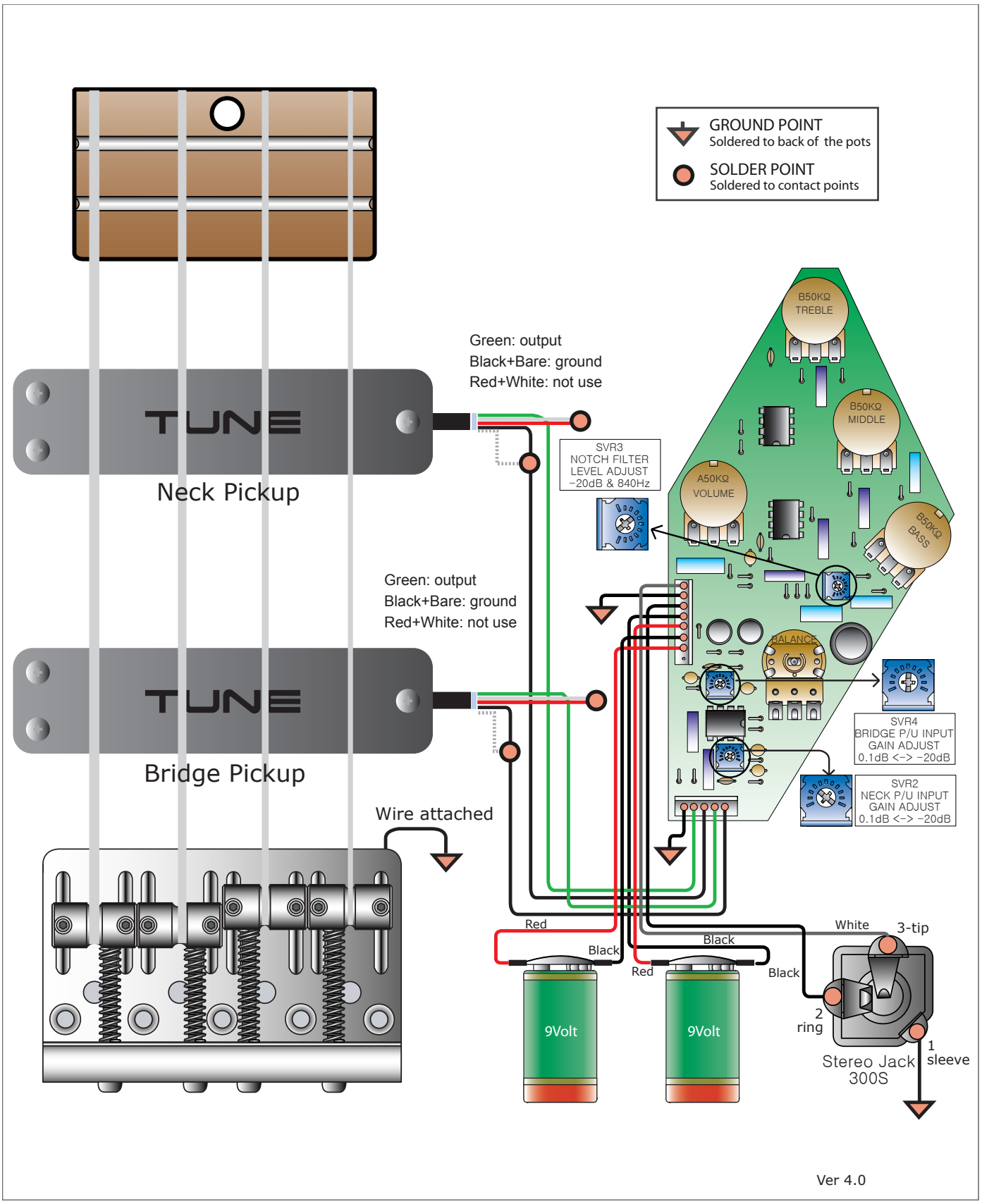

Ver 4.0